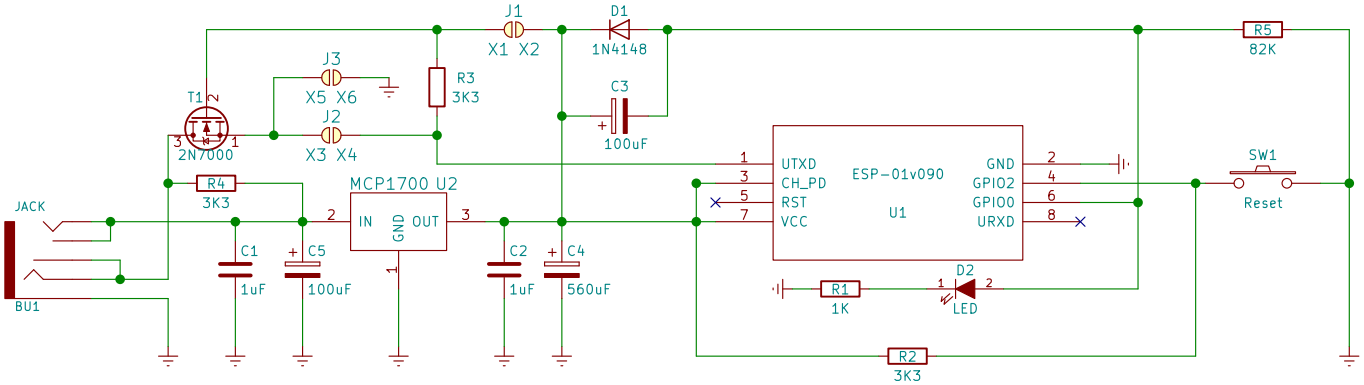

	J1	J2	J3
TTL:	ON	ON	
RS232:			ON

Original schema layout by Mr Nixie

azevedo devices

Sheet: /

File: nwts-v3.0.sch

Title: nwts v3.0

Size: A4	Date: 2016-10-19	**Rev:**
KiCad E.D.A. kicad 4.0.5		Id: 1/1